VA flow meters

RA 60 / FA 60

Assembly and operating Instructions

Variable Area Flow Meters
RA 60 / FA 60

Kirchner und Tochter

A. Kirchner & Tochter GmbH Dieselstraße 17 · D-47228 Duisburg
Fon: +49 2065 9609-0 · Fax: +49 2065 9609-22 Internet: www.kt-web.de · e-mail: info@kt-web.de
Version 1.7

Contents

1. Foreword ... 3

2. Safety ... 3
   2.1. Symbol and meaning ... 3
   2.2. General safety directions and exemption from liability ... 3
   2.3. Intended use ... 3
   2.4. Special safety instructions concerning glass devices ... 4
   2.5. Information for Operator and operating personnel ... 4
   2.6. Regulations and guidelines ... 4
   2.7. Notice as required by the hazardous materials directive ... 4

3. Transport and storage ... 4

4. Installation ... 5
   4.1. Work preparatory to installation ... 5
   4.2. Preparation of the measuring device: ... 5
   4.3. Installation RA 60 ... 6
   4.4. Installation FA 60 ... 7

5. Start-up ... 7

6. Readings in operation ... 7

7. Limit switches MSK1 / MSK12 / MSKW ... 8
   7.1. Connection of limit switches ... 8
   7.2. Setting the limit switches ... 8
   7.3. Right angle plug ... 9

8. Maintenance and cleaning of the flow meter ... 10
   8.1. Dismantling the glass cone RA 60 ... 10
   8.2. Assembling the glass cone RA 60 ... 11
   8.3. Replacement of the glass cone RA 60 ... 11
   8.4. Dismantling of the glass cone FA 60 ... 12
   8.5. Installation of the glass cone FA 60 ... 12
   8.6. Replacement of the glass cone FA 60 ... 12

9. Service ... 13
   9.1. Disposal ... 13

10. Technical data ... 13
   10.1. Materials ... 14
   10.2. Measuring ranges ... 15
   10.3. Dimensions ... 16
   10.4. Technical data of limit switches ... 18
   10.5. Low-Voltage Directive ... 18

1. Foreword

These Installation and Operating Instructions are applicable to devices of Series RA 60 and FA 60. Please follow all instructions and information given for installation, operation, inspection and maintenance. The Instructions form a component part of the device, and should be kept in an appropriate place accessible to the personnel in the vicinity of the location. Where various plant components are operated together, the operating instructions pertaining to the other devices should also be observed.

2. Safety

2.1. Symbol and meaning

Safety notice

This symbol is placed against all directions/information relating to occupational health and safety in these Installation and Operating Instructions, and draws attention to danger to life and limb. Such notices should be strictly observed.

2.2. General safety directions and exemption from liability

This document contains basic instructions for the installation, operation, inspection and maintenance of the variable area flow meter. Non-observance of these directions can lead to hazardous situations for man and beast and also to damage to property, for which Kirchner und Tochter disclaims all liability.
The operator is required to rule out potentially hazardous situations through voltage and released media energy.

2.3. Intended use

The Series RA 60 / FA 60 device is a variable area flow meter designed for liquids and gases, and for installation in vertical pipe runs. Installation in the pipeline should be carried out solely in accordance with these Instructions. The required version of variable area flow meter should be selected on the basis of the pipe diameter at the point of use of the device. The limit values pertaining to the device are given in Section 10 and should not be exceeded. Modifications or other alterations to the flow meter may only be carried out by Kirchner und Tochter. Installation in horizontal pipe runs is possible using appropriate pipe bends. The direction of flow must always be from bottom to top. Details of the process product and the operating conditions are marked on the measuring glass.

2.4. Special safety instructions concerning glass devices

For safety reasons, we recommend fitting a protective shield in front of the measuring tube when starting up flow meters fitted with glass measuring tubes. The devices should not be operated where there is a risk of pressure surges (water hammer)!

To avoid glass breakage, all fitting work between measuring glass and heads inside the glass should be carried out by twisting and simultaneously pressing after having wetted the packing rings/gaskets.

2.5. Information for Operator and operating personnel

Authorized installation, operating, inspection and maintenance personnel should be suitably qualified for the jobs assigned to them, and should receive appropriate training and instruction.

2.6. Regulations and guidelines

In addition to the directions given in these Installation and Operating Instructions, observe the regulations, guidelines and standards, such as DIN EN, and, for specific applications, the codes of practice issued by DVGW (gas and water) and VdS (underwriters), or the equivalent national codes, and applicable national accident prevention regulations.

2.7. Notice as required by the hazardous materials directive

In accordance with the law concerning handling of waste (critical waste) and the hazardous materials directive (general duty to protect), we would point out that all flow meters returned to Kirchner und Tochter for repair are required to be free from any and all hazardous substances (alkaline solutions, acids, solvents, etc.).

Make sure that devices are thoroughly rinsed out to neutralize hazardous substances.

3. Transport and storage

Always use the original packing for transport, handling and storage. Protect the device against rough handling, impact, jolts, etc.

4. Installation

4.1. Work preparatory to installation

Preparation of the installation point:

- Check the pipe run at the point of installation. Variable area flow meters are only suitable for vertical installation and an upward flow direction (from bottom to top). For all other installation situations, appropriate pipe bends need to be fitted in the existing pipeline to ensure upward vertical flow through the device.
- The region of steady flow should be 4 to 6 x DN upstream and downstream of the location. Control equipment for gaseous media in particular should be installed downstream of the flow meter.
- If necessary, support the pipeline on both sides of the flow meter to prevent vibration from being transferred to the device.
- Before connecting, clean the pipelines leading to the device by blowing out or flushing.
- Prepare the installation point for the measuring device with appropriate pipe threads (RA 60) or flanges (FA 60) before beginning installation work. Pay attention to the correct spacing of the sealing faces and to exact alignment.
- Under no circumstances should the variable area flow meter be used to draw the pipe ends together (install free of stresses!). Do not over-tighten the union nuts.

4.2. Preparation of the measuring device:

1. Remove the device from the transport packing.
2. Remove the transport protection stoppers from the ends of the device.
3. Pull the float securing rod out of the device (PVC red or grey).
4. Check that the float can move freely in the device.
5. Have ready: flat gaskets (FA 60) or packing material such as hemp (RA 60). These are not included with the supply.

4.3. Installation RA 60

1. Remove the insert, Item 1, and the union nuts, Item 3, from the device.
2. Slip the union nuts over the ends of the pipeline at the installation point.
3. Screw the inserts using packing material (e.g. hemp) to the ends of the pipeline.
4. Slide the device together with the flat gaskets, Item 2, on both ends into the installation point.
5. Screw the union nuts, Item 3, on to the device heads, Item 4, and tighten them so that the device is positioned in the pipeline free of stresses.

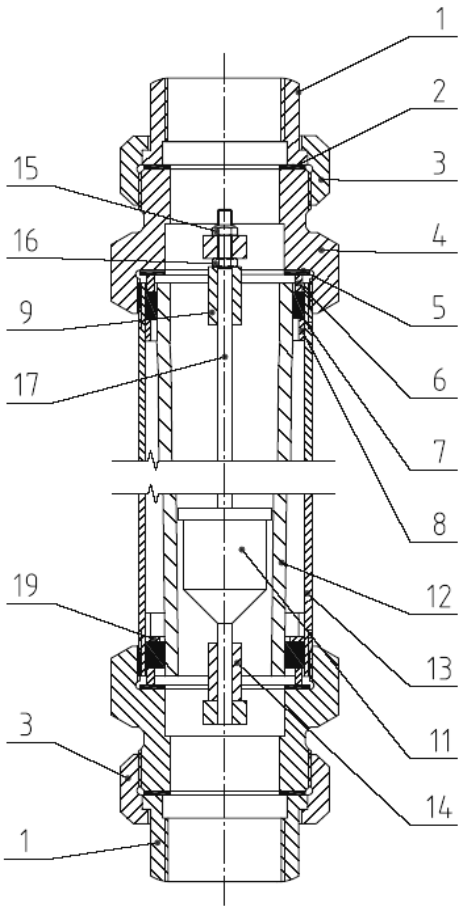

4.4. Installation FA 60

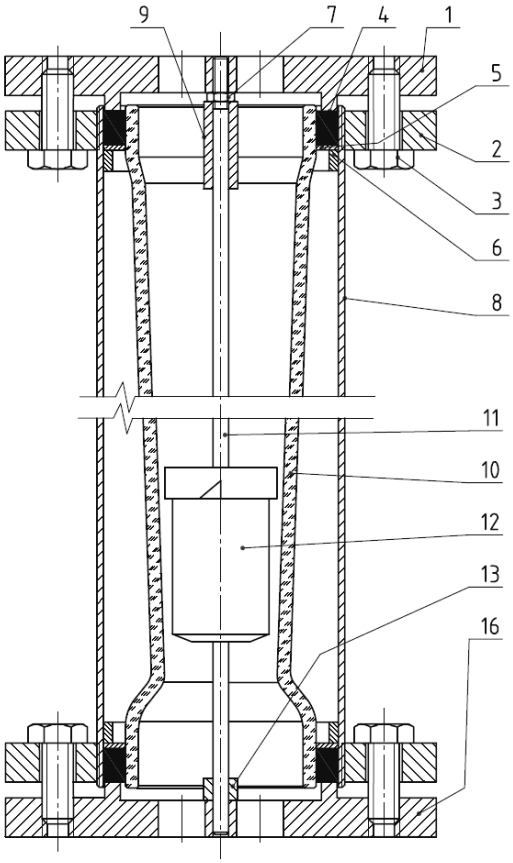

1. Slide the device together with the flat gaskets (not included with supply) at both ends (Item 1) into the installation point.
2. Check that the flat gaskets are in alignment and do not project into the pipeline.
3. Fit the bolts and nuts of the flanged connection loosely.
4. Tighten the bolted connection between customer-supplied flange and Item 1 in diagonally opposite sequence so that the device is fixed free of stresses in the pipeline.

5. Start-up

The device must be properly installed before it is started up.

1. Check all device connections.
2. To set the flow: pressurize the pipelines by slowly opening the shut-off valves. On liquid service: carefully evacuate the pipeline.
3. Check the leak-tightness of all components and, if necessary, tighten down threaded joints or screw connections.

6. Readings in operation

The flow value is read off from the scale on the glass cone at the top edge of the float. The measured-value readings are only correct when the operating condition at the measuring point (flowing medium, operating pressure and temperature) corresponds to the values marked on the measuring glass. If operating conditions should differ, the measured value must be corrected with the aid of the general float equation, which you will find in our technical documents.

You can also do the recalculation with the help of our conversion program given on our home page: www.kt-web.de, Section “Physical Basics“.

7. Limit switches MSK1 / MSK12 / MSKW

The flow meter can be equipped with limit switches to provide local indication with monitoring function. The limit switches consist of a limit switch (reed switch) that is switched over by the magnet integrated in the float.

The limit switch is guided in a guide slot in the protective case and can be adjusted over the full measuring range. The reed switches have a bistable characteristic.

Uncontrolled current and voltage peaks can occur in the case of inductive or capacitive loads, e.g. from contactors or solenoid valves. Such peaks will also occur, depending on cable geometry, where cables exceed a certain length.

We therefore recommend using an MSR contact protection relay, which is additionally available. This will increase the contact rating and prevent occurrence of inductive and capacitive peaks, thus ensuring long service life of the contacts.

Electrical data and limit values are specified in Section 10.4.

7.1. Connection of limit switches

Electrical connection of the device must be carried out in conformity with the relevant VDE regulations (or equivalent national standards) and in accordance with the regulations issued by the local power supply utility.

1. Disconnect the plant from supply before connecting the limit switch.
2. Provide a protective circuit for the switches in keeping with their capacity.
3. Connect line-side fuse elements matched to consumption.
4. Connect the cable using the supplied right-angle plug (Section 7.3, page 9. The circuit diagram for the limit switches is shown in the Technical Data , Section 10.4 on page 18.

7.2. Setting the limit switches

1. Loosen the lock nut M8 on the neck of the switch.
2. Slide the switch to the flow value required to be monitored.
3. Please make sure the contact never touches the measuring glass and the clearance between contact and glass is always approx. 1mm. This clearance can be obtained by turning the contact in the sliding block.
4. Test the switching characteristic by moving the float over and beyond the switching position.
5. Retighten the lock nut. **Maximum fastening torque is 2 Nm.**

7.3. Right angle plug

Connector	field-wireable female connector, M12 x 1, angled
Number of poles	4-pole
Contacts	metal, CuZn, optalloy-plated
Contact carriers	plastic, PA, black
Grip	plastic, PBT, black
Seal	plastic, FPM
Degree of protection	IP67, only tightened with screws
External diameter of the cable	4...6mm
Core cross-section /Clamping ability	max. 0.75 mm^2
Screw-in thread	PG 7
Connection mode	screw clamp
Mechanical lifespan	min. 50 contact durability
Pollution degree	3
Rated voltage	max. 250 V
Insulation resistance	≥ $10^8 \Omega$
Ampacity	4 A
Forward resistance	≤ 8 mΩ
Ambient temperature Connector	-25... +85°C

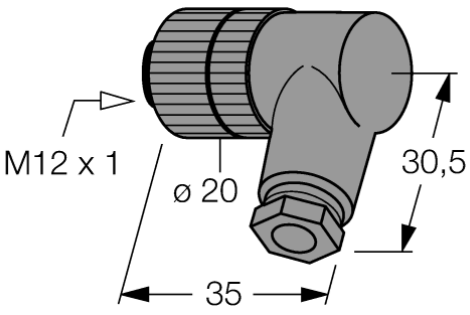

dimensions

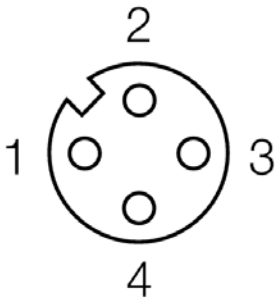

pin configuration

8. Maintenance and cleaning of the flow meter

The device is maintenance-free. Should the glass cone become fouled, the device can be removed from the pipeline as follows.

8.1. Dismantling the glass cone RA 60

1. First dismantle the device by undoing the screw connections, Item 3.
2. Take the device out together with the gaskets, Item 2.
3. Detach upper head, Item 4, together with gasket, Item 5, and thrust collar, Item 6, from the device. If the float is provided with a guide, Item 17, remove this completely with the head but without dismantling it any further.
4. Unscrew the lower head, Item 4, and remove the gasket and thrust collar.
5. On nonguided floats, the float stops (receptacles) in the measuring glass are either helical springs or inserts made of plastics. Remove these together with the float and make a note of the installation positions and directions.
6. Remove the glass from the case by pressing it towards an opening. Avoid using sharp pointed tools. If not required, leave the rubber ring in place on the glass cone.

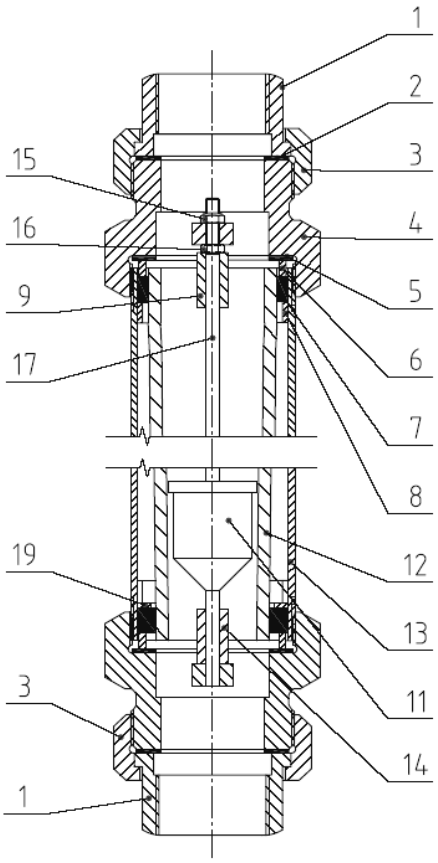

Clean the glass cone. Do not use any abrasive implements or aggressive cleaning agents (wire brushes, scouring cleaners, alkaline solutions, acids, etc.).

8.2. Assembling the glass cone RA 60

Reassemble in the reverse order of dismantling:

1. Be aware of the original direction of installation and the installation positions.
   - In particular, do not let tools come into direct contact with the glass when inserting the glass cone and jointing the loose rubber ring.
   - In this instance, use water as a lubricant.
2. Inspect all gaskets to see whether they can still be used, and replace if necessary.
3. Align the glass cone so that the markings can be read off through the cutout in the case.

8.3. Replacement of the glass cone RA 60

Proceed as described in point 8.1. and point 8.2

8.4. Dismantling of the glass cone FA 60

1. Remove the device together with the gaskets pertaining to the flanged connections (detach the flanged connections).
2. Dismantle the outer flanges, Items 1 and 16.
3. On non-guided floats: the float stops in the measuring glass are either helical springs or inserts made of plastics. Remove these together with the float and make a note of the installation positions and directions.
4. Press the glass cone to one side out of the case. Avoid using sharp pointed tools. Remove the loose rubber ring from the glass cone.
   - The ring remaining on the glass cone does not need to be removed.
5. Clean the glass cone. Do not use abrasive tools or aggressive cleansing agents (wire brush, scouring cleaner, alkaline solutions, acids, etc.).

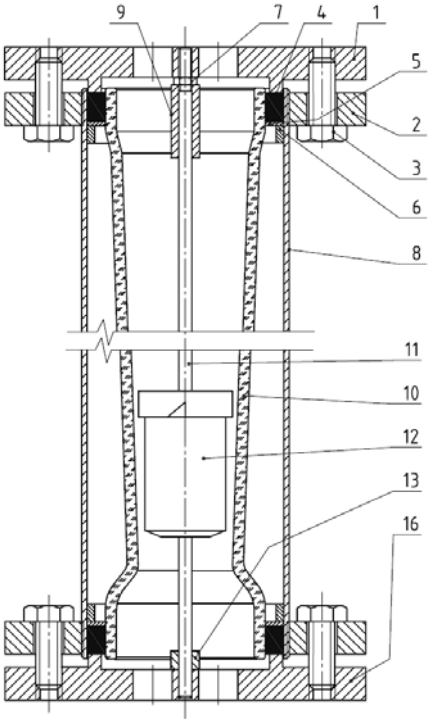

8.5. Installation of the glass cone FA 60

Reassemble in reverse order:

1. Replace the glass cone together with the rubber ring in the case and slip the loose rubber ring over the glass cone. Use water as lubricant (wet rubber ring first).
2. Align the glass cone so that the inscriptions can be read through the cutout in the case.
3. Tighten down the bolts of the outer flanges (in diagonally opposite sequence).

8.6. Replacement of the glass cone FA 60

Proceed as described in point 8.4 and in Point 8.5.

9. Service

All devices with defects or deficiencies should be sent direct to our repair department. To enable our customer service facility to deal with complaints and repairs as quickly as possible, you are kindly requested to coordinate the return of devices with our sales department, Tel. +49 2065-96090.

9.1. Disposal

Please help to protect our environment, and dispose of workpieces in conformity with current regulations or use them for some other purpose.

10. Technical data

Nominal pressure rating	FA 60: PN 10 at 20°C RA 60: PN 10 at 20°C
Max. operating pressure	See table measuring ranges
Thermal endurance	80°C at 5 bar gauge
Turndown ratio	1:10
Accuracy class	1.6 to VDI/VDE 3513
Connection RA 60	Bolted joint consisting of nut with fastening thread to DIN ISO 228 T1 Insert with fitting thread to DIN 2999, ISO 7-1
Connection FA 60	Flanges PN 10 to DIN EN 1092-1

10.1. Materials

Protective case	Precision steel tubing (grade St35)
Heads RA 60	Grey cast iron GG20 (cast aluminium AlSi9Cu3 for size 43 and higher)
Screw connection	Malleable cast iron EN-GJMW-400-5, galvanized
Flanges FA 60	SJ235JR (grade St37-2 steel)
Measuring glass	Borosilicate glass
Gaskets	NBR, optionally Viton, EPDM
Float for fluids[1)]	Standard: 1.4571 Special version: PVC, PP, PVDF or PTFE with lead core
Float for gases[1)]	Standard: anodized aluminium Special version: PVC, PP, PTFE, PVDF or 1.4571
with limit switches[1)]	Standard: 1.4571 sst with magnetic core or PVC with magnetic core

[1)] Floats up to size 19 are non-guided, floats from size 30 on are guided.
Optional size 19 is in guided version available.

10.2. Measuring ranges

Size	Measuring range m^3/h H_2O			Measuring range m^3/h air at STP 1)			Max. oper. press [bar] at 20 °C
10	0,1	–	1 l/h	0,001	–	0,01	10
	15	–	150 l/h	0,22	–	2,2	
19	0,012	–	0,12	0,15	–	1,5	10
	0,12	–	1,2	1,6	–	16	
30	0,1	–	1	1,3	–	13	10
36	0,4	–	4	4	–	40	8
	0,8	–	8	8	–	80	
43	0,9	–	9	5	–	50	8
	1,6	–	16	16	–	160	
100	1,6	–	16	12	–	120	6
	2	–	20	28	–	280	
110	2,5	–	25	14	–	140	5
	3	–	30	44	–	440	
150				30	–	300	4
				100	–	1000	
180				30	–	300	3
				150	–	1500	

1) at STP: at standard conditions (0 °C and 1013 bar abs.)

10.3. Dimensions

FA 60 Size	DN	L	H	D	k	Screws Quantity	Screws Thread	d_2
10	10	340	28	90	60	4	M 12	M 12
	15			95	65	4	M 12	M 12
	20			105	75	4	M 12	M 12
	25			115	85	4	M 12	M 12
19	10	340	45	90	60	4	M 12	M 12
	15			95	65	4	M 12	M 12
	20			105	75	4	M 12	M 12
	25			115	85	4	M 12	M 12
30	25	340	60	115	85	4	M 12	M 12
	32			140	100	4	M 16	M 16
	40			150	110	4	M 16	M 16
36	32	340	75	140	100	4	M 16	M 16
	40			150	110	4	M 16	M 16
	50			165	125	4	M 16	M 16
43	40	340	95	150	110	4	M 16	M 16
	50			165	125	4	M 16	M 16
	65			185	145	4	M 16	M 16
100	65	340	115	185	145	4	M 16	M 16
	80			200	160	8	M 16	M 16
	100			220	180	8	M 16	M 16
110	65	340	133	185	145	4	M 16	M 16
	80			200	160	8	M 16	M 16
	100			220	180	8	M 16	M 16
150	80[2)]	640	178	220	160	8	M 16	M 16
	100			220	180	8	M 16	M 16
	125			250	210	8	M 16	M 16
	150			285	240	8	M 20	M 20
180	150	640	219	285	240	8	M 20	M 20
	200			340	295	8	M 20	M 20

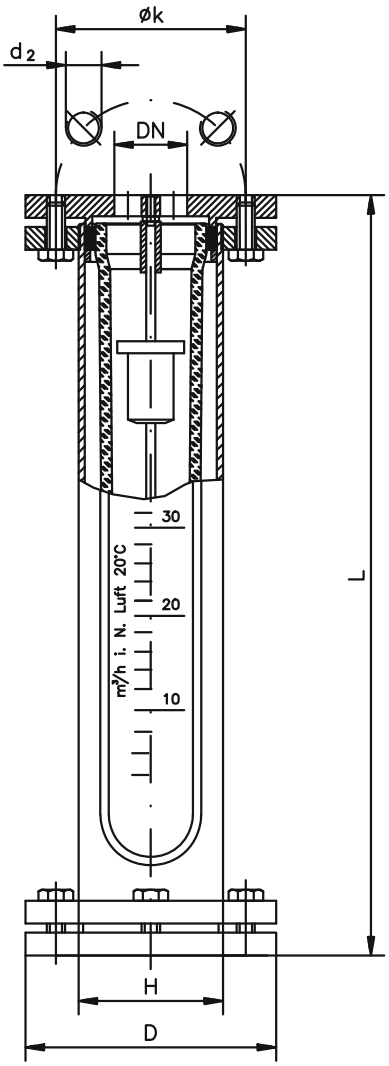

[2)] 655 mm overall length

RA 60					
Size	Pipe union	d 1]	S	L	H
10	Rp 1/4	12	28	388	28
	Rp 3/8	16	32	390	
	Rp 1/2	20	39	393	
19	Rp 1/2	20	39	405	45
	Rp 3/4	25	48	407	
	Rp 1	32	55	415	
30	Rp 1	32	55	415	60
	Rp 1 1/4	40	67	430	
	Rp 1 1/2	50	74	436	
36	Rp 1 1/4	40	67	430	75
	Rp 1 1/2	50	74	436	
	Rp 2	63	90	446	
43	Rp 1 1/2	50	74	440	95
	Rp 2	63	90	446	
	Rp 2 1/2	75	111	460	
	Rp 3	90	131	470	
100	Rp 2	63	90	446	115
	Rp 2 1/2	75	111	458	
	Rp 3	90	131	470	
110	Rp 2 1/2	75	111	462	133
	Rp 3	90	131	474	

1] d with gluing and welding sleeves

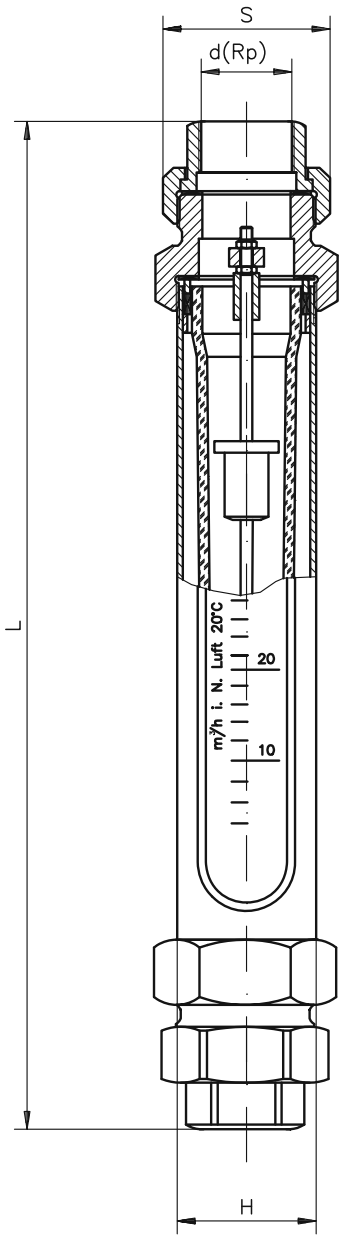

10.4. Technical data of limit switches

Design	MSK1	MSK12
Voltage switched	50VAC/75VDC	50VAC/75VDC
Current switched	0,5A	0,5A
Contact rating	10W/VA	10W/VA
Dielectric strength	230VAC/400VDC	230VAC/400VDC
Temperature range	-20 to +90°C	-20 to +90°C
Switching function	normally closed contact	normally open contact
Connection	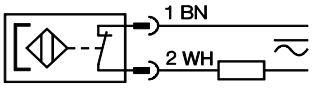	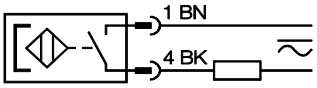
Design	**MSKW**	
Voltage switched	50VAC/75VDC	
Current switched	0,5A	
Contact rating	5W/VA	
Dielectric strength	110VAC/200VDC	
Temperature range	-20 to +90°C	
Switching function	change over contact	
Connection	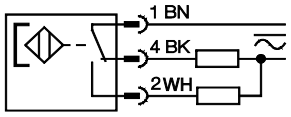	

[1] The deciding factor is the thermal endurance of the flow meter!
Connection via right angle plug M12x1

10.5. Low-Voltage Directive

Above 50 V AC/75 V DC, contacts are subject to the EU Low-Voltage Directive.
The user is required to verify their use accordingly.

The equipment from **Kirchner und Tochter** has been tested in compliance with applicable CE-regulations of the European Community.

The respective declaration of conformity is available on request.

Technical data supplied without liability. The current valid version of our documents can be found under this URL: www.kt-web.de

The **Kirchner und Tochter** QM-System is certified in accordance with DIN-EN-ISO 9001:2008. The quality is systematically adapted to the continuously increasing demands.

Kirchner und Tochter

A. Kirchner & Tochter GmbH Dieselstraße 17 · D-47228 Duisburg
Fon: +49 2065 9609-0 · Fax: +49 2065 9609-22 Internet: www.kt-web.de · e-mail: info@kt-web.de
Version 1.7