Fortress Interlocks

Data Sheet

S

mGard is the ultimate range of robust **mechanical trapped key products**. Trapped key technology offers purely mechanical access locks (removing the need for expensive wiring). mGard offers an extensive variety of modular interlocking solutions.

description:

the S is a key operated rotary switch suitable for panel mounting. As part of an interlock system the switch unit directly or indirectly isolates the electrical power to the machinery.

The switch is directly operated by the key, which is trapped in the lock when the power supply is **ON**. Releasing the key turns the power **OFF**.

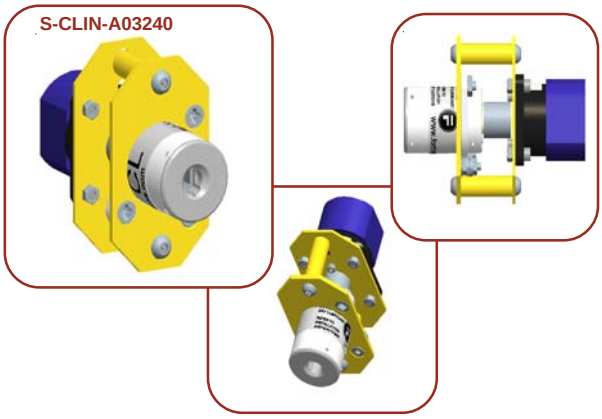

options:

stainless steel loaded dustcover

- Part / All Stainless Steel Basic Locks
- Masterable locks and keys
- Special Switch contact configurations
- Colour coded keys and locks

part number

www.fortressinterlocks.com

Fortress Interlocks

Technical Data

S

Construction

Mounting Plate:	Zinc Plated Mild Steel
Lock Mechanism:	Die-cast zinc body with stainless steel operating mechanism
Key:	Stainless Steel

Features & Benefits

Direct drive operation - Positively opens contacts

Available in 20A, 32A, 63A and 150A versions (specials upon request)

Coding can be up to 30 characters

Over 200,000 non-masterable lock combinations available

4NO, 2NO/2NC or 4NO/4NC contacts (other contacts available on request)

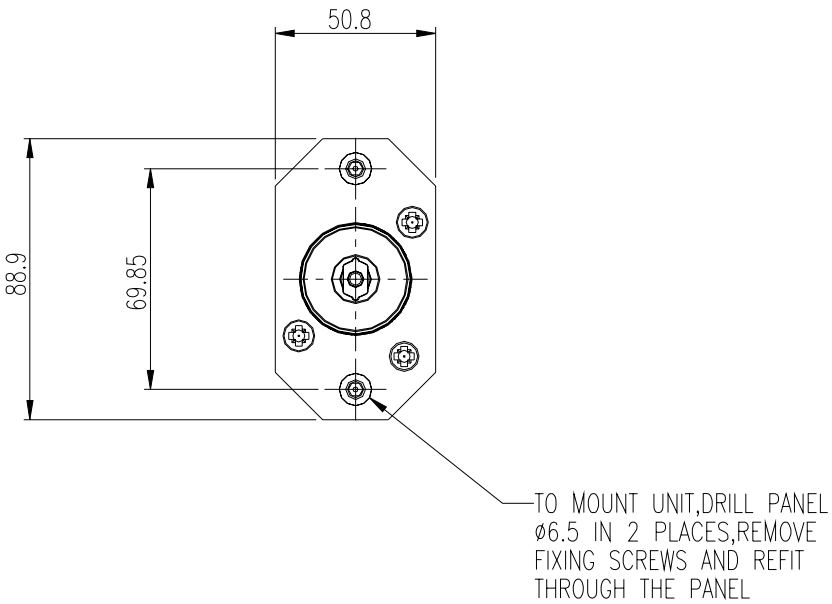

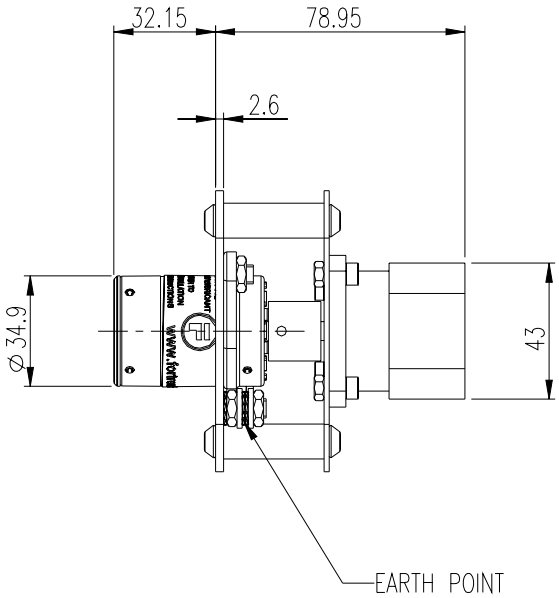

S-CLIN-A02040

Fortress Interlocks

Technical Data

S

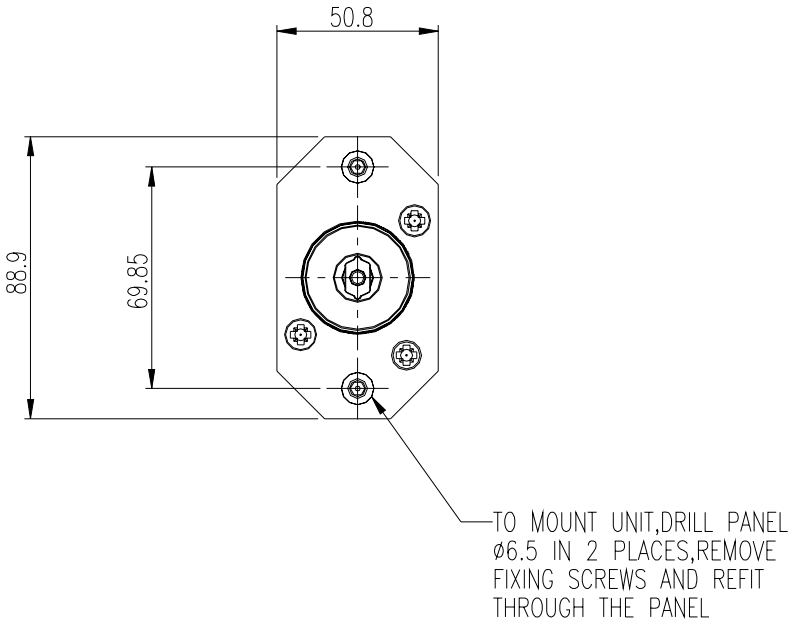

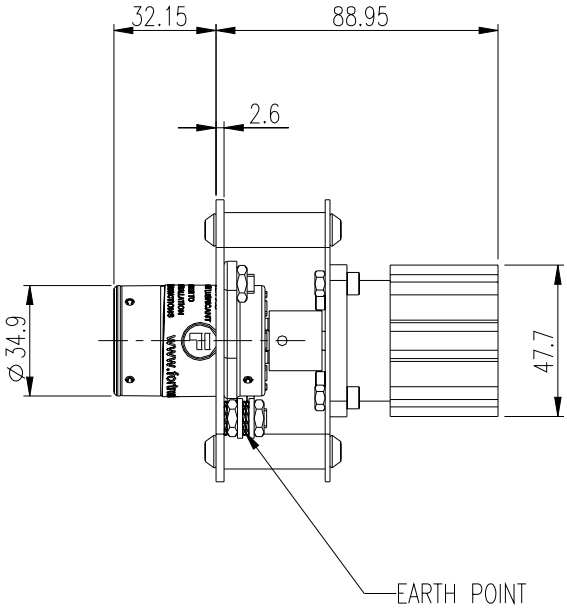

S-CLIN-A03240

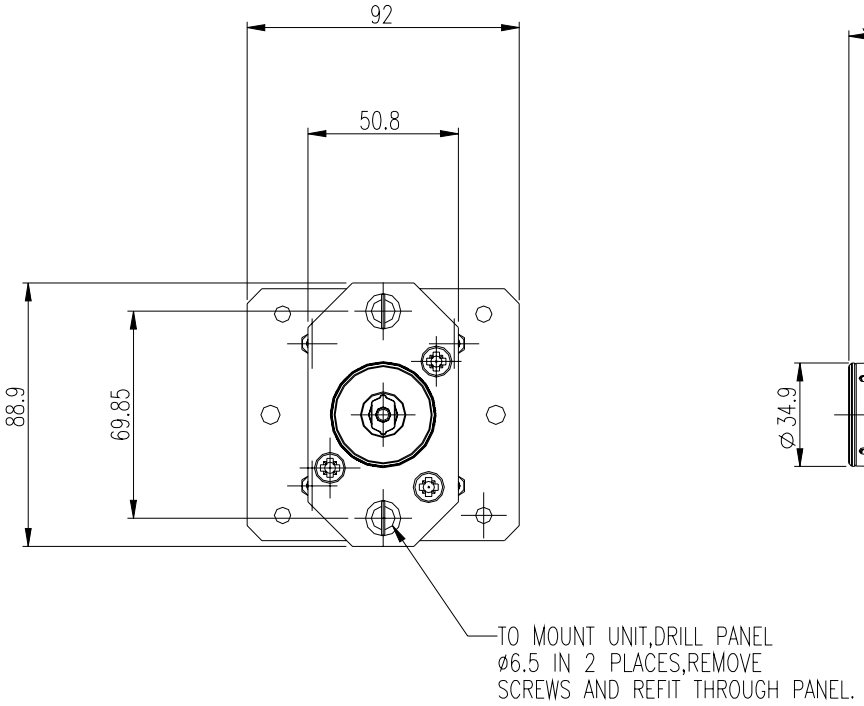

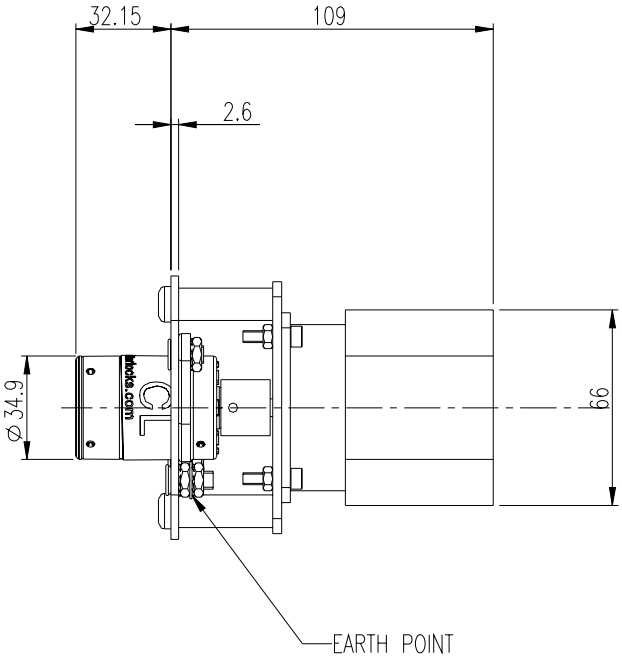

S-CLIN-A06340

Fortress Interlocks

Technical Data

S

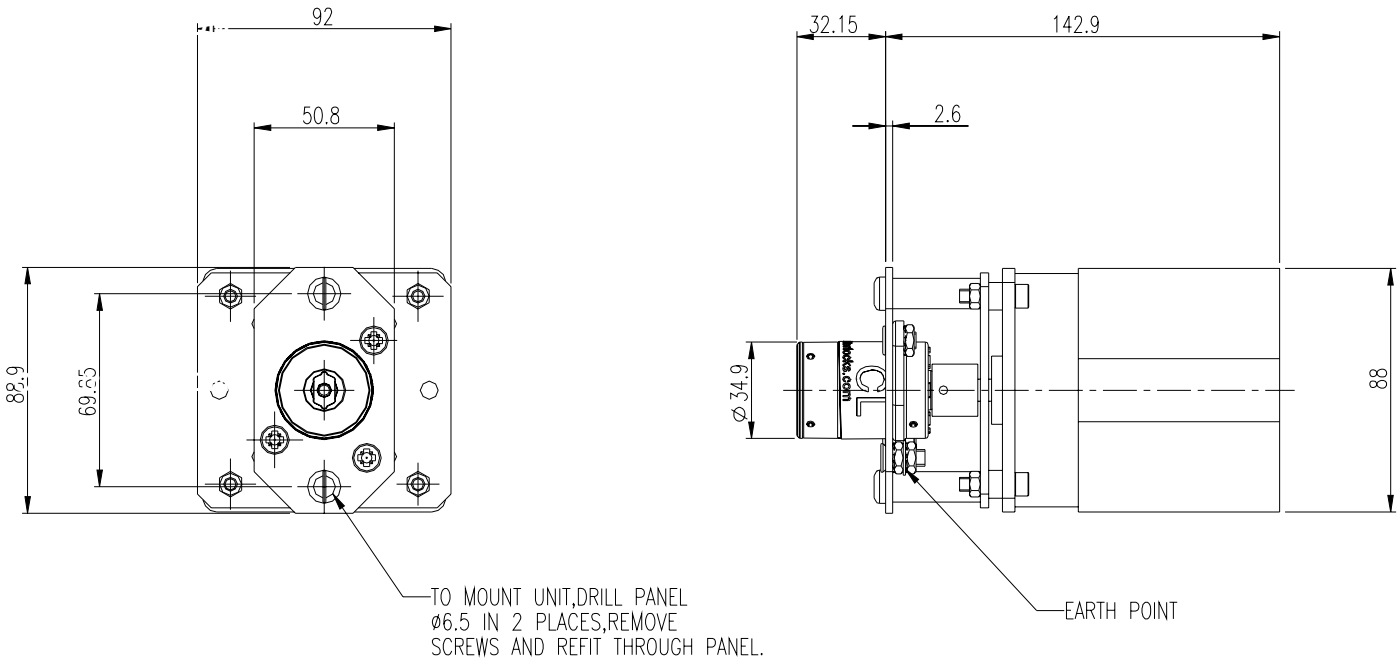

S-CLIN-A15040

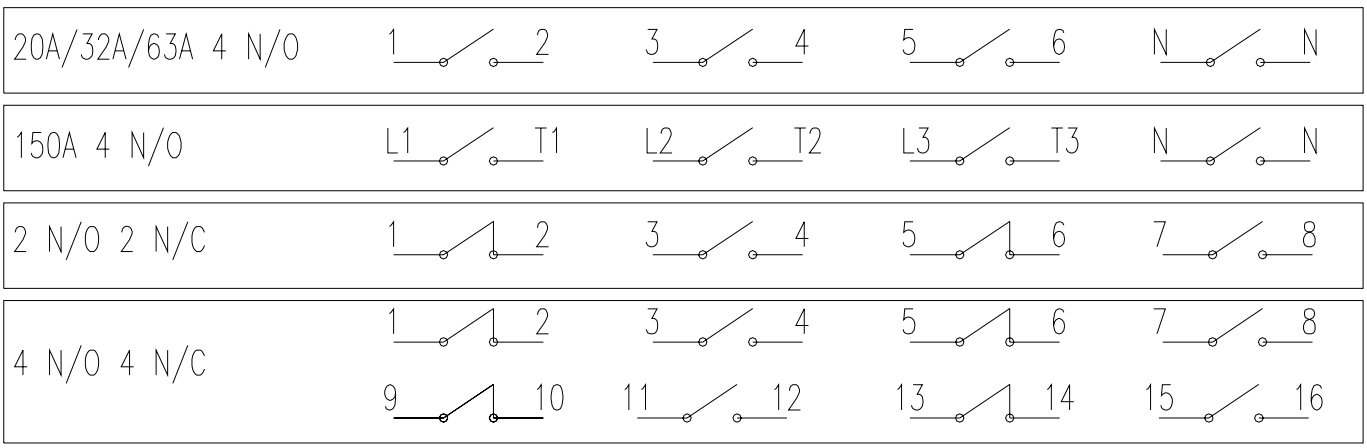

Wiring Diagram